PROJECT NO. SHEET NO.

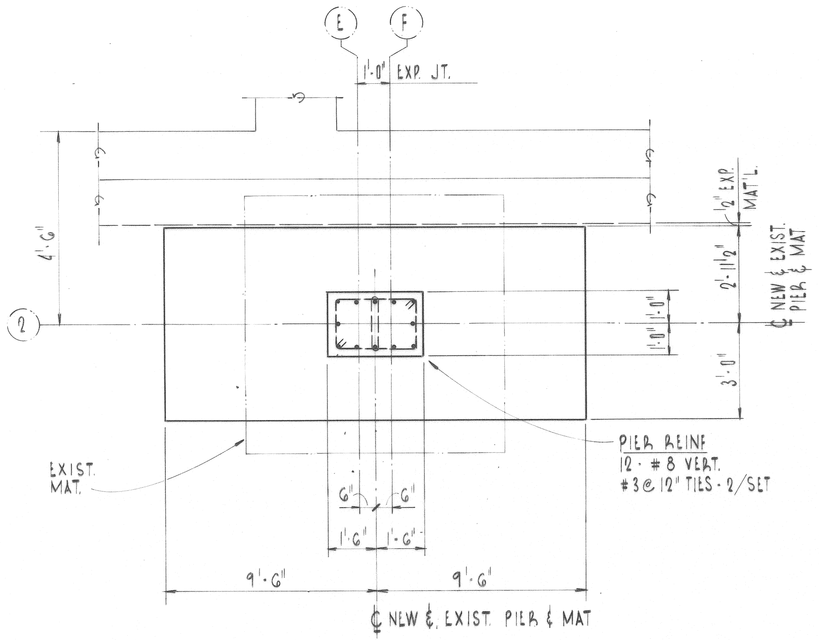

PLAN

FOOTING TYPE "J"

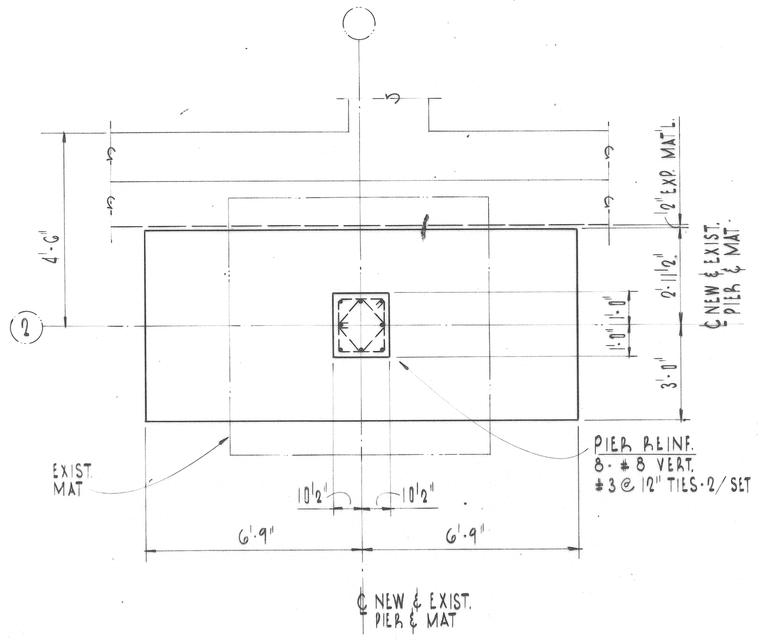

PLAN

FOOTING TYPE "K"

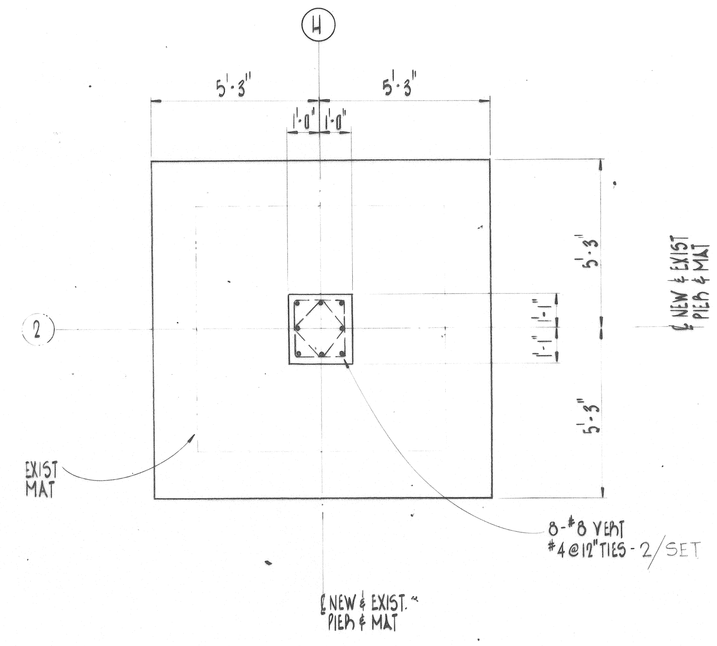

PLAN

FOOTING TYPE "L"

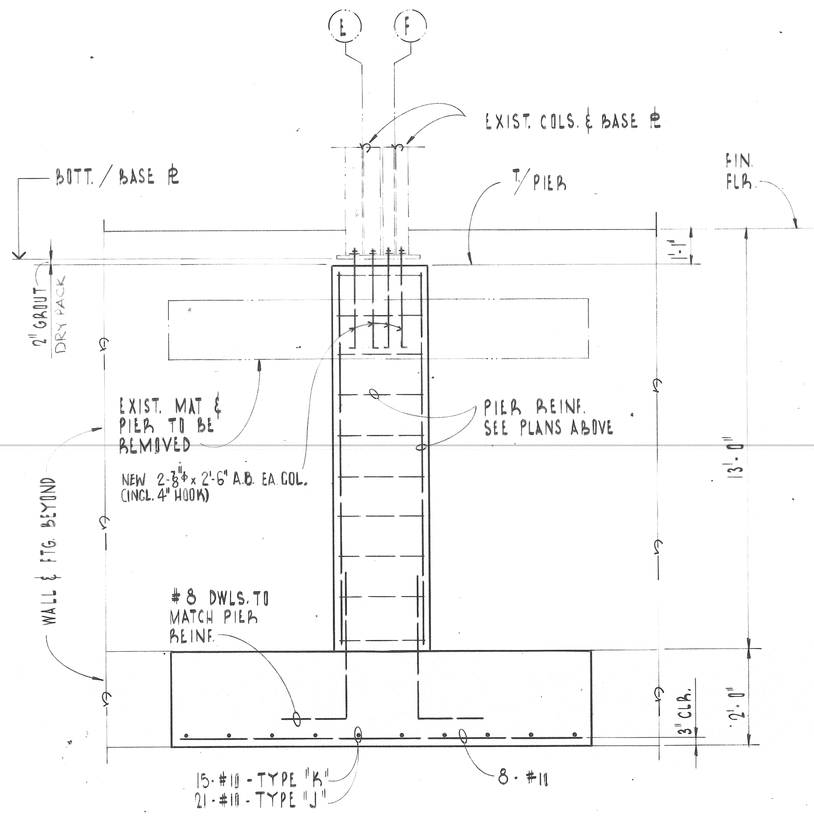

ELEVATION

FOOTING TYPE "J", TYPE "K" SIM.

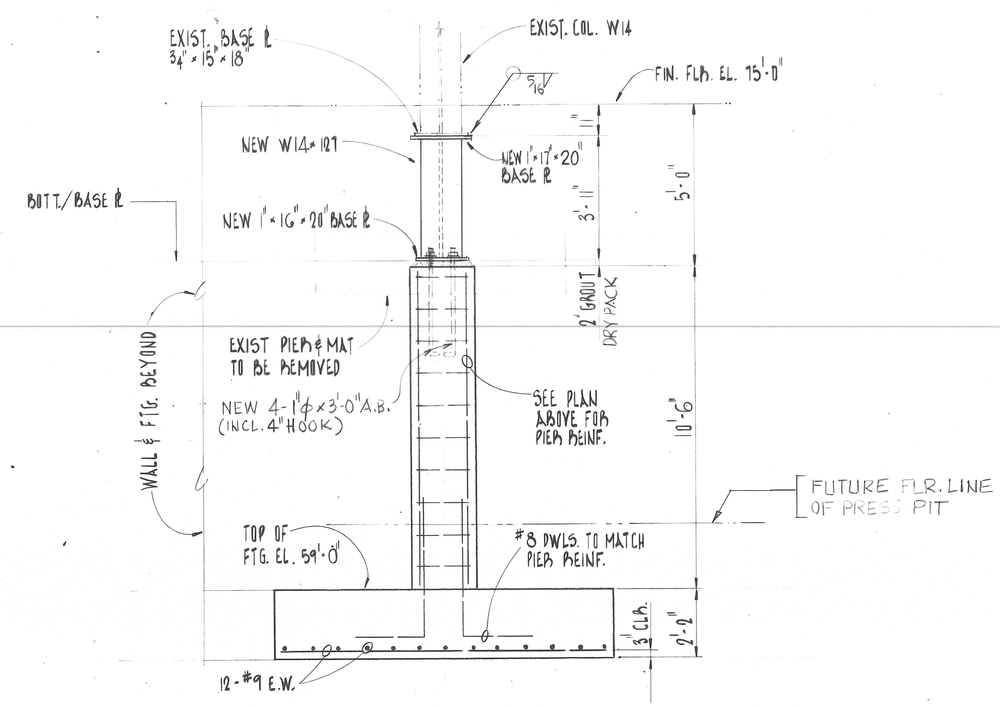

ELEVATION

FOOTING TYPE "L"

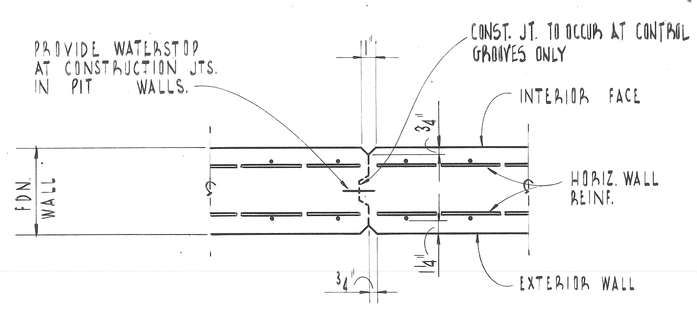

NOTE:

WHEN CONTROL GROOVE IS LOCATED AWAY FROM PILAS, STOP ALL EXTERIOR HORIZ. REINF. & ALTERNATE INTERIOR REINF. 1" FROM ℄ OF CONTROL GROOVE, EXCEPT TOP & BOTT. REINF. WHICH IS TO BE CONTINUOUS. PROVIDE KEYED CONST. JTS. (C.J.) AS LOCATED ON PLAN

TYPICAL CONTROL GROOVE & CONSTRUCTION JOINT IN FOUNDATION WALLS

CONC. PIT WALLS SHALL BE PLACED IN ALTERNATE AREAS BETWEEN CONST. JTS. WHERE INDICATED ON PLAN

DATE	ISSUED FOR	APPROVAL	APPROVAL
7-29-78	BULL. PC. #1	R. Edman	

NO.	DATE	BY	APPROVAL	APPROVAL
#5	10-19-78	R.R.	R. Edman	
#3	7-15-78	R.R.		

REVISIONS

CONTRACT SIGNATURES

FOR THE OWNER

FOR THE CONTRACTOR

DRAWING CERTIFIED BY

NIKOLA NEDELJKOVIC

Registered Professional Engineer

Commonwealth Of Virginia

DATE No. 10531

GM Plant Engineering & Construction

General Motors Corporation 485 West Milwaukee Avenue Detroit, Michigan 48202

MANUFACTURING BUILDING MODIFICATIONS

FOR

DELCO MORAINE DIVISION

GENERAL MOTORS CORPORATION

FREDERICKSBURG VIRIGINIA

PROJECT TITLE

SECTIONS & DETAILS

SHEET TITLE

OWNER'S IDENTIFICATION

4909

P. E. & C. PROJECT NUMBER

DATE

DRAWN BY A. D. RAVESCHOT

JOB CAPT. A. REINLEIN C. PATEL

SC-4

SHEET NUMBER

P. E. & C. 145 REV. 1-77 K&E 19 1155 3-78 3595M