PROJECT NO. SHEET NO.

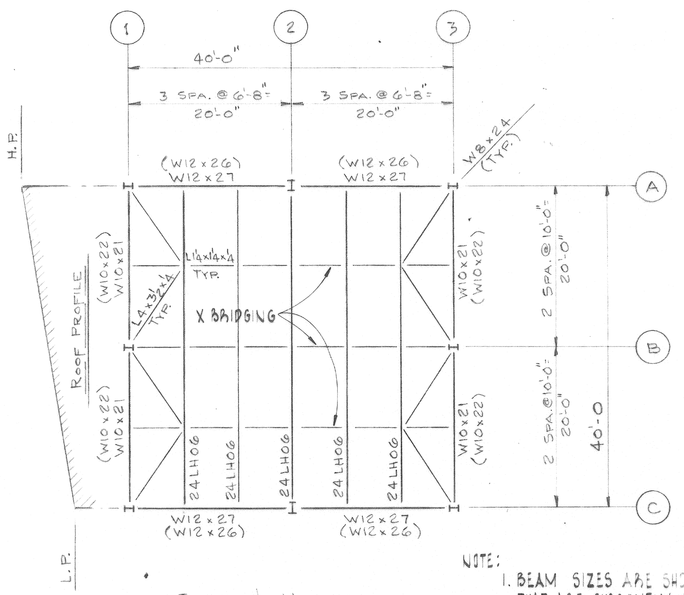

SWITCH HOUSE
ROOF FRAMING PLAN
3/32" = 1'-0"

NOTE:
1. BEAM SIZES ARE SHOWN FOR SHAPES THAT ARE CURRENTLY AVAILABLE AND ALSO FOR THE NEW SHAPES THAT WILL BE PRODUCED AFTER AUG. 31, 1978
2. EXTEND BOTTOM CHORD OF JOIST LOCATED ON COL. LINES & CONN. TO COLUMN.

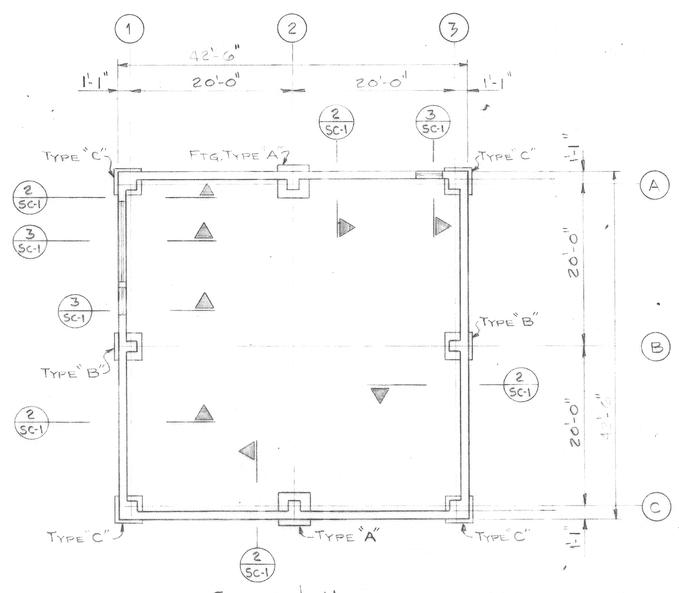

SWITCH HOUSE
FOUNDATION PLAN
3/32" = 1'-0"

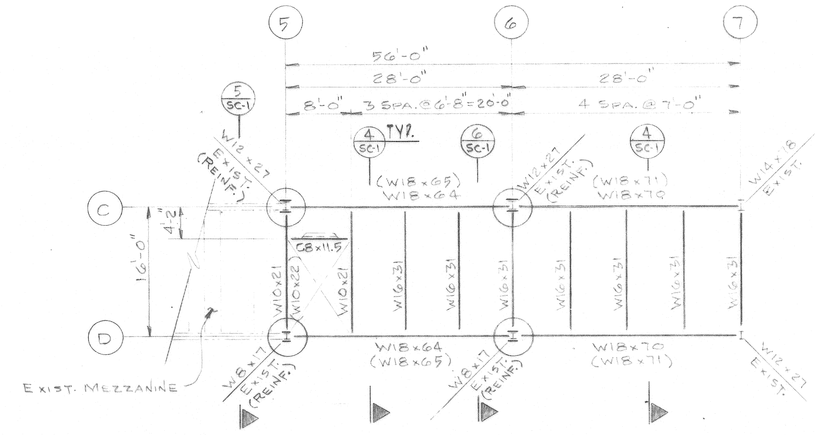

FRAMING PLAN ~ TRANSFORMER MEZZANINE
3/32" = 1'-0" T.O.S. EL. 12'-7"

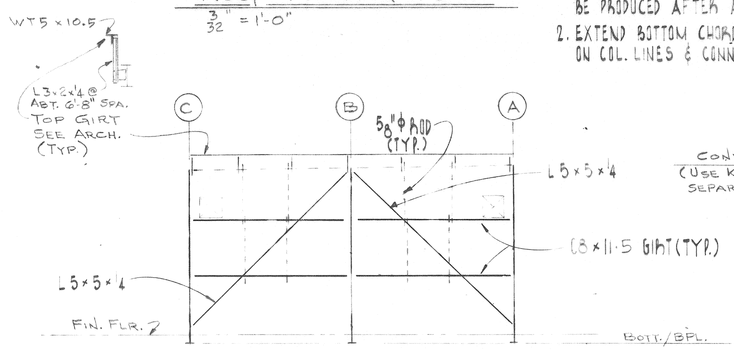

NORTH ELEVATION
3/32" = 1'-0"

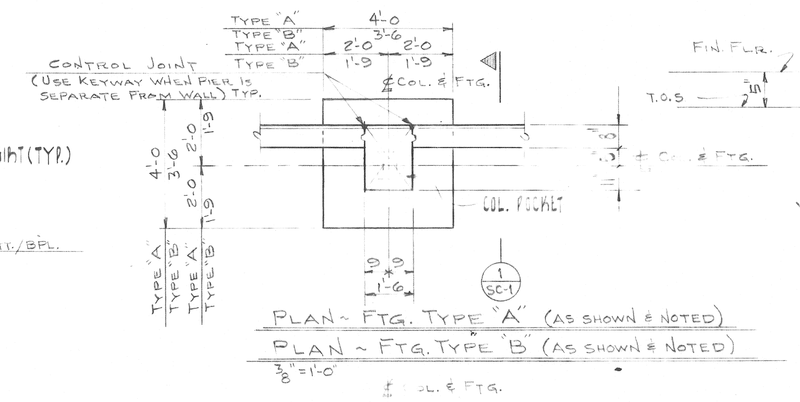

PLAN ~ FTG. TYPE "A" (AS SHOWN & NOTED)
PLAN ~ FTG. TYPE "B" (AS SHOWN & NOTED)
3/8" = 1'-0"

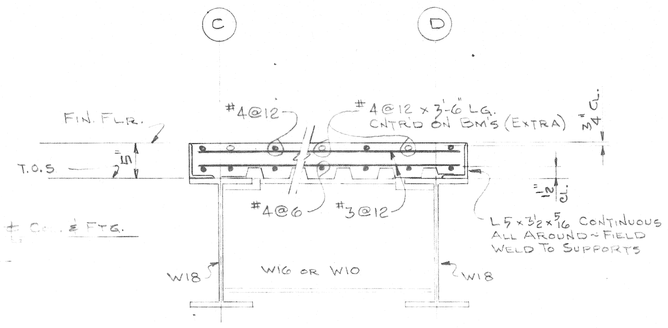

4 SC-1 1" = 1'-0"
TYPICAL SLAB REINFORCING

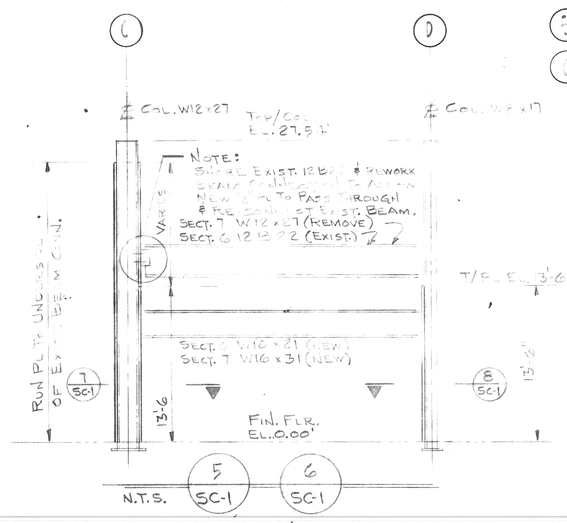

5 SC-1 6 SC-1

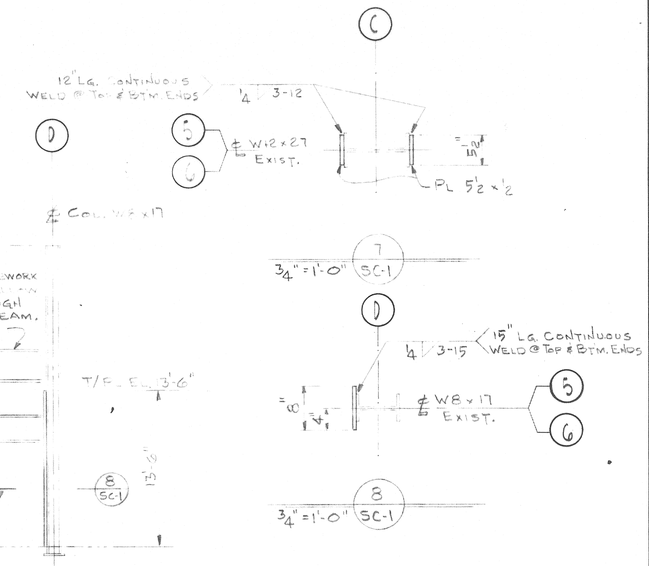

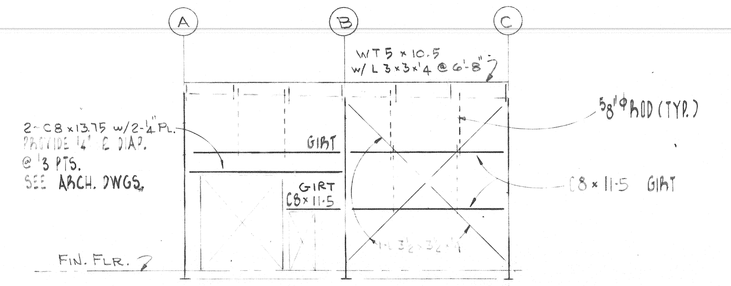

SOUTH ELEVATION
3/32" = 1'-0"

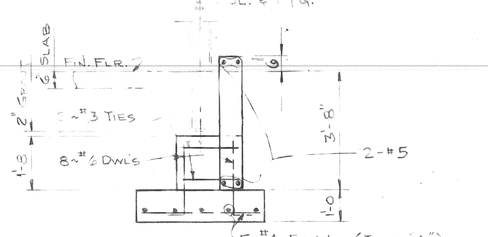

1 SC-1 3/8" = 1'-0"

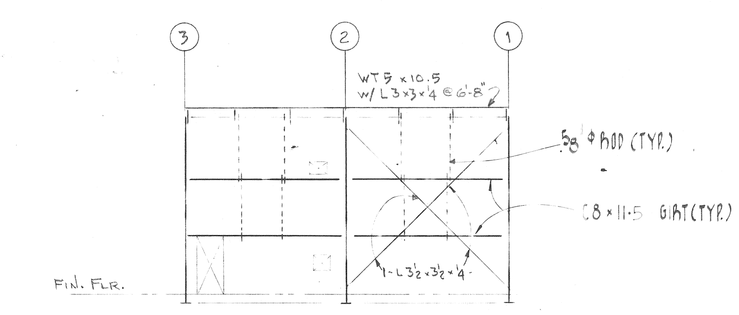

WEST ELEVATION
3/32" = 1'-0"

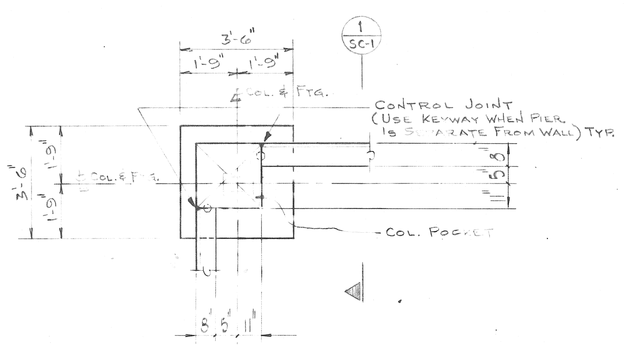

PLAN ~ FTG. TYPE "C"
3/8" = 1'-0"

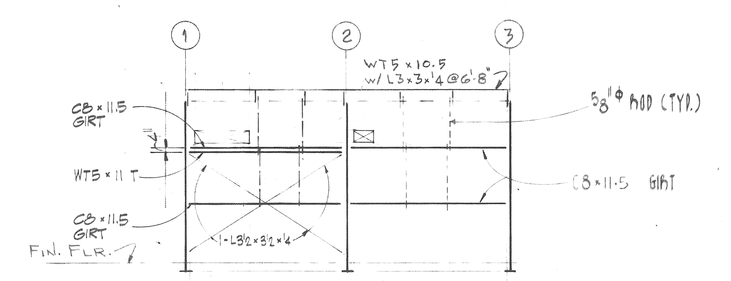

EAST ELEVATION
3/32" = 1'-0

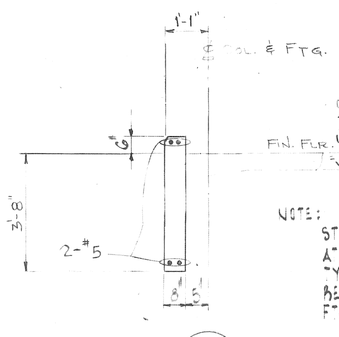

NOTE:
STOP TOP & BOTT. REINF. A" COL. PIERS FOR FTG. TYPES A & B. STOP TOP REINF. AT PIERS FOR FTG. TYPE 'C'

2 SC-1 3/8" = 1'-0"

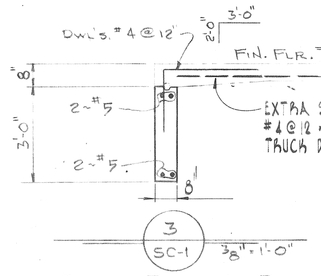

3 SC-1 3/8" = 1'-0"
GRADE BEAM AT DOOR OPENINGS

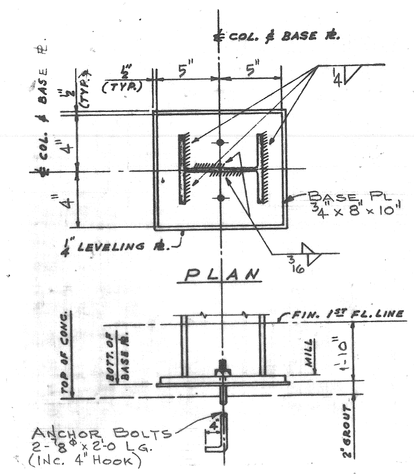

ELEVATION
COLUMN BASE DETAIL TYPE "A"

GENERAL NOTES

1. THE FOLLOWING NOTES SUPPLEMENT AND TAKE PRECEDENCE OVER THE STRUCTURAL STEEL SPECIFICATIONS.
2. STRUCTURAL STEEL DESIGN IS BASED ON THE USE OF A.S.T.M. GRADE A36 STEEL, UNLESS NOTED.
3. ALL BEAM CONNECTIONS ARE TO CONFORM TO A.I.S.C. STANDARD TWO ANGLE WEB CONNECTIONS CAPABLE OF SUPPORTING 75% OF THE TOTAL UNIFORM LOAD CAPACITY TABULATED IN THE TABLES FOR "ALLOWABLE LOADS ON BEAMS", UNLESS NOTED BELOW.
4. PROVIDE SHELF ANGLES AT PURLIN LEVEL AT THE TOP OF COLUMNS AND ELSEWHERE AS REQUIRED TO SUPPORT ROOF DECK OR PERMANENT METAL FORMS.
5. ANCHOR BOLTS AND LEVELING PLATES ARE TO BE FURNISHED BY THE STRUCTURAL STEEL CONTRACTOR AND SET BY THE FOUNDATION CONTRACTOR. LOOSE BASE PLATES ARE TO BE FURNISHED AND SET BY THE STRUCTURAL STEEL CONTRACTOR AND GROUTED BY OTHERS.
6. SHOP CONNECTIONS ARE TO BE WELDED UNLESS HIGH STRENGTH BOLTS ARE APPROVED OR NOTED.
7. FIELD CONNECTIONS FOR MAIN MEMBERS, STRUTS, AND PURLINS IN LINE WITH SWAY FRAMES OR FORMING PART OF THE BRACING SYSTEM SHALL BE MADE WITH HIGH STRENGTH BOLTS.
8. REFER TO ARCHITECTURAL DRAWINGS FOR THE LOCATION, ELEVATIONS, AND DIMENSIONS OF STRUCTURAL STEEL UNLESS NOTED.
9. THE STRUCTURAL STEEL CONTRACTOR SHALL FAMILIARIZE HIMSELF WITH THE EXISTING CONDITIONS WHEN NEW WORK JOINS EXISTING AND VERIFY ALL DIMENSIONS SHOWN ON THE DRAWING BEFORE BEGINNING THE NEW WORK. ALL DISCREPANCIES SHALL BE REPORTED TO THE GM PLANT ENGINEERING & CONSTRUCTION FIELD REPRESENTATIVE AND TO THE GM PLANT ENGINEERING & CONSTRUCTION STRUCTURAL DEPARTMENT.

GENERAL NOTES: (THE PHRASE "UNLESS OTHERWISE SHOWN OR NOTED" APPLIES TO EACH NOTE).

1. CONCRETE STRENGTH: MINIMUM REQUIRED STRENGTH OF CONCRETE (PSI) AT 28 DAYS TO BE AS FOLLOWS:-
   BELOW GRADE 3000
   EXTERIOR WALLS 3000
   SEE SPECIFICATIONS FOR REMAINING CONSTRUCTION TYPES.
2. REINFORCING STEEL: SEE SPECIFICATIONS FOR REQUIREMENTS. TENSILE STRESSES (LBS./SQ. IN.) USED IN DESIGN ARE AS FOLLOWS: FOR REINFORCING STEEL BARS:
   GRADE 60 - YIELD 60,000, ALLOWABLE 24,000, TO BE USED UNLESS NOTED.
   GRADE 40 - YIELD 40,000, ALLOWABLE 20,000, TO BE USED ONLY WHERE SPECIFICALLY CALLED FOR AS FOLLOWS: PIER TIES
3. CONCRETE PROTECTION FOR REINFORCING STEEL: SEE SPECIFICATIONS, UNLESS OTHERWISE SPECIFICALLY DETAILED.
4. ALL CONSTRUCTION JOINTS SHALL BE KEYED WITH KEY CENTERED ON MEMBER. WHERE THE SIZE OF KEY IS NOT SHOWN ON THE DRAWINGS, THE KEY WIDTH SHALL BE ONE THIRD OF THE CROSS SECTION DIMENSION OF THE MEMBER AND THE KEY DEPTH SHALL BE 10% OF THE CROSS SECTION DIMENSION OF THE MEMBER WITH A MINIMUM DIMENSION OF 3/4 INCHES.
5. FOOTINGS AND FOUNDATIONS ARE TO REST ON FIRM UNDISTURBED NATURAL SOIL UNLESS SPECIFICALLY STATED THAT THEY REST ON FIRM THOROUGHLY COMPACTED APPROVED FILL. THE MINIMUM ALLOWABLE BEARING CAPACITY SHALL BE 2500 LBS./SQ. FT. AS ASSUMED IN THE DESIGN.
   FOR PRESS PIT AREA SEE SHT. № SC-3
6. ALL FOOTING DEPTHS AND EXCAVATIONS ARE SUBJECT TO THE APPROVAL OF THE ARCHITECT ENGINEER'S REPRESENTATIVE WHO SHALL BE CONSULTED WHEN POOR SOIL, WATER, OBSTRUCTIONS, PIPING, ADJACENT SEWERS, EXISTING FOOTINGS, EXCAVATIONS, ETC., ARE ENCOUNTERED.
7. SEE SPECIFICATIONS FOR SETTING OF ANCHOR BOLTS, LEVELING PLATES, COLUMN BASE PLATES, BEAM BEARING PLATES AND FOR PROVIDING AND PLACING OF GROUT BEDS.
   SEE STRUCTURAL STEEL SHOP DRAWINGS FOR ELEVATION OF LEVELING PLATES, BASE PLATES, BEARING PLATES, LOCATION OF ANCHOR BOLTS AND DIMENSION FOR GROUT. GROUT THICKNESS INCLUDES THICKNESS OF LEVELING PLATES.
8. PROVIDE POCKETS OR RECESSES AND CONCRETE FILLS FOR COLUMNS AND BEAMS AS REQUIRED AND/OR AS CALLED FOR IN THE SPECIFICATIONS EVEN IF NOT SHOWN ON THE DRAWINGS.
9. PROVIDE RECESS IN TOP OF FOUNDATION WALLS AND GRADE BEAMS AT DOOR OPENINGS, RAMPS, ETC. FOR SUPPORT OF THICKENED FLOOR SLABS AND TO RECEIVE DOOR JAMBS. DEPTH OF RECESS TO BE 2 INCHES GREATER THAN THICKNESS OF FLOOR SLAB.
10. WHERE FOUNDATION WALL FOOTINGS ARE USED, THE TOP OF FOOTINGS ARE TO BE FLUSH WITH TOPS OF COLUMN SPREAD FOOTINGS. STEP FOOTINGS AS REQUIRED AT RATIO OF 2 HORIZONTAL TO 1 VERTICAL.
11. PROVIDE HORIZONTAL BENT BARS AT ALL CORNERS AND INTERSECTIONS OF CONCRETE WALLS USING THE SAME SIZE AND SPACING AS FOR HORIZONTAL WALL REINFORCING. USE BENT DOWELS IF NECESSARY TO DEVELOP ANCHORAGE.
12. PROVIDE VERTICAL DOWELS FROM COLUMN AND PIER FOOTINGS TO PIERS AND FROM WALL FOOTINGS TO WALLS, OF SAME SIZE AND SPACING AS VERTICAL REINFORCING AND OFFSET FOR SPLICE AS REQUIRED.
13. SEE ARCHITECTURAL DRAWINGS FOR DIMENSIONS AND DETAILS NOT SHOWN OR CALLED FOR. VERIFY ALL EXISTING DIMENSIONS BEFORE PROCEEDING WITH NEW WORK.
14. "AS BUILT" DRAWINGS: SHOW ACTUAL BOTTOM OF FOOTING ELEVATIONS AND OTHER APPROVED DEVIATIONS FROM THE PLANS IN ACCORDANCE WITH THE GENERAL CONDITIONS OF THE SPECIFICATIONS.

DATE	ISSUED FOR	APPROVAL	APPROVAL
6-22-78	A.L. "ALADES BID	R. Reyes	E. Bohnenkamp

NO.	DATE	BY	APPROVAL	APPROVAL
#6	9-27-78	R.R.	R. Reyes	E. Bohnenkamp
#3	9-13-78	R.R.	R. Reyes	E. Bohnenkamp

REVISIONS

CONTRACT SIGNATURES
FOR THE OWNER
FOR THE CONTRACTOR

DRAWING CERTIFIED BY
NIKOLA NEDELJKOVIC
Registered Professional Engineer
Commonwealth Of Virginia
DATE No. 10531

Plant Engineering & Construction
General Motors Corporation 485 West Milwaukee Avenue Detroit, Michigan 48202

MANUFACTURING BUILDING MODIFICATIONS
FOR
DELCO MORAINE DIVISION
GENERAL MOTORS CORPORATION
FREDERICKSBURG VIRIGINIA
PROJECT TITLE

SWITCH HOUSE & TRANSFORMER MEZZANINE STRUCTURAL STEEL & CONCRETE PLANS & SECTIONS
SHEET TITLE

OWNER'S IDENTIFICATION
4909 P. E. & C. PROJECT NUMBER
DATE 6-22-78
DRAWN BY C. DREYER
JOB CAPT. R. REINLEIN S. PAUL GUPTA
SC-1
SHEET NUMBER

P.E. & C. 145 REV. 1-77 K&E 17 0153 12-77 3499+